The Bio-Conversion of Putrescent Wastes



ESR International LLC
27C Pham Hong Thai
Dalat City, Vietnam

prepared by
Dr. Paul A. Olivier

Imagine

Suppose we were asked to imagine the best possible way to dispose of putrescent waste, to imagine a totally natural process that would effect an enormous reduction in weight and volume within a matter of just a few hours. This process should require no energy, no electricity, no chemicals, not even water. It should be totally self-contained and not emit a drop of effluent, and aside from a small

Simple & Easy to Operate

amount of carbon dioxide, it should not produce methane or any other greenhouse gases. It should operate at ambient temperatures and pressures. The unit housing this process should operate with the simplicity of a garbage bin. It should have no moving parts, and it should require very little servicing and maintenance, very little expertise or experience to operate.

Unlimited Quantities

It should not emit offensive odors, and it should drive away houseflies and other filth-bearing flies. This simple and inexpensive unit could be situated out-of-doors in a shaded area, and any number of units could be coupled together to handle unlimited quantities of waste.

On-site Recycling of Food Waste

Since food waste would be rapidly reduced and recycled at its point of origin, it would eliminate altogether the collection, transport and land-filling of food waste. This bioconversion process, however, should not demand the introduction of anything foreign or exotic.

No Transmission of Disease

It should be powered by a creature commonly found throughout the whole of Asia, and even though this creature may have lived alongside humans for thousands of years, it should not be associated in any way with the transmission of disease. In view of the wide variability of putrescent waste presented to it, this benign creature should possess one of the most robust digestive systems within nature.

Ideal Bioconversion Agent

It must have the ability to thrive in the presence of salts, alcohols, ammonia and a variety of food toxins. In addition to food waste, it should also be able to process swine, human and poultry waste. Upon reaching maturity, it should be rigidly regimented by evolution to migrate out of the unit and into a collection bucket without any human or mechanical intervention.

Reintegration of Nutrients

This self-harvesting grub should represent a bundle of nutrients that should rival in commercial value the finest fish meal. Why not boldly insist upon the reintegration into the feed chain of most of the nutrients contained within putrescent waste? Why allow bacteria to break down and devalue the complex organic compounds within the waste?

Ideal to Real

Is the bioconversion process described above nothing but a fanciful leap of the imagination? Hopefully as we proceed, it will become clear that this process does, indeed, exist, and that it represents the cleanest, most efficient, and most economical way to recycle most types of putrescent waste.

The Black Soldier Fly

The agent chosen for this bioconversion process is the larva of the black soldier fly (BSF) *Hermetia illucens*, a tropical fly indigenous to the whole of the Americas, from the southern tip of Argentina to Boston and Seattle. During World War II, the black soldier fly spread into Europe, India, Asia and even Australia.

The Adult Black Soldier Fly









Fig. 1. Hermetia illucens (L) - adult

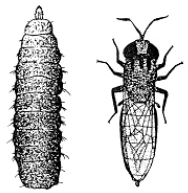

Fig. 2. Hermetia illucens (L) - larva and adult

A Beneficial Fly

Unlike many other flies, BSF adults do not go into houses, they do not have functional mouth parts, they do not eat waste, they do not regurgitate on human food, and therefore, they are not associated in any way with the transmission of disease. Adults do not bite, bother or pester humans in any way. Even though their larvae have been known to survive inside the human gut if swallowed whole,

Enteric Myiasis

this only happens under utterly extreme and bizarre conditions and poses no real danger to humans.

True

enteric myiasis does not exist in man through the agency of BSF larvae or any other fly larvae, whereas pseudomyiasis can occur, even through the agency of ordinary houseflies. BSF adults congregate near a secluded bush or tree in order to find and select a mate. After mating, the females

Life Cycle

A female produces about 900 eggs in her short life of 5 to 8 days. Housefly adults, by contrast, live up to 30 days, and during this long period, they must eat, and in so doing, they are actively engaged in the spread of disease. BSF eggs are relatively slow in hatching: from 102 to 105 hours. The newly hatched larvae then crawl or fall onto the waste and eat it with amazing speed.

Life Cycle

Under ideal conditions, it takes about two weeks for the larvae to reach maturity. If the temperature is not right, or if there is not enough food, this period of two weeks may extend to six months. The ability of the BSF larva to extend its life cycle under conditions

of stress is a very important reason why it was selected for this waste disposal process. BSF larvae

Tough & Robust

reaching maturity, they are about 25 mm in length, 6 mm in diameter, and they weigh about 0.2 grams. These larvae are extremely tough and robust. They can survive under conditions of extreme oxygen deprivation. It takes, for example, approximately two hours for them to die when submerged in rubbing alcohol. They can be subjected to several 1000 g's of centrifugation without harming them in any way.

Texas Experiment

In an experiment conducted in Texas over a period of

one year, ESR Ltd determined that BSF larvae can digest over 15 kilograms per day of restaurant food waste per square meter of feeding surface area. A 95% reduction in the weight and volume of this waste was also noted. This means that for every 100 kgs of restaurant food waste deposited into a unit, only 5 kgs of a black, friable residue remain!

Bioconversion

What percentage of fresh food waste bio-converts into fresh prepupae? In the same experiment in Texas, we noted that roughly 20% by weight of fresh food waste converted into fresh larvae. This food waste had an average dry matter content of 37%, and the prepupae had an average dry matter content of 44%. On a dry matter basis, the bioconversion of food waste situates at almost 24%.

100 kg Food Waste per Day

The following flow diagram is based upon an input of 100 kg of food waste per day.

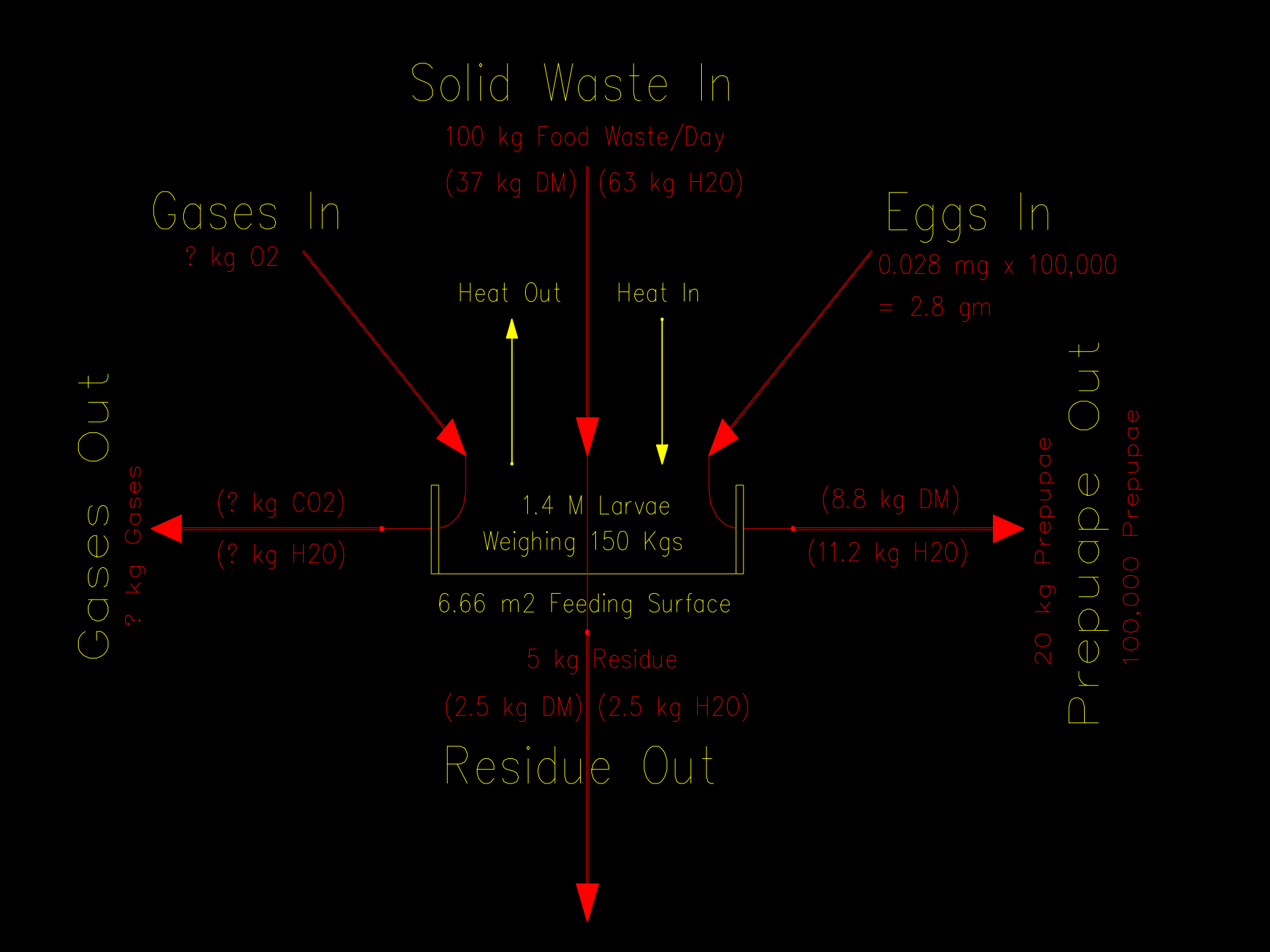
Solid Waste In
100 kg Food Waste/Day
(37 kg DM) (63 kg H2O)
Gases In
? kg O2
Eggs In
0.028 mg x 100,000
= 2.8 gm
Heat Out
Heat In
Gases Out
? kg Gases
(? kg CO2)
(? kg H2O)
1.4 M Larvae
Weighing 150 Kgs
(8.8 kg DM)
(11.2 kg H2O)
Prepupae Out
20 kg Prepupae
100,000 Prepupae
6.66 m2 Feeding Surface
5 kg Residue
(2.5 kg DM) (2.5 kg H2O)
Residue Out

Nothing More Powerful



The Remains of a Huge Pumpkin



Larvae Devouring Watermelon



Larvae Eating Fish and Fruit Waste



Larvae Eating Horse Manure



Fresh Horse Manure

Larvae Eating Horse Manure



Horse manure 40 minutes later

Larvae Eating Horse Manure



24 hours later

Larvae Eating Armadillo



flesh and shell eaten within less than 24 hours

Larvae Eating Alligator Waste



flesh eaten within less than 24 hours

Two- to Four-Inch Layer

Over 100,000 active larvae can be found in a small waste disposal unit, and as we have seen, these larvae have the ability to eat and digest just about any type of putrescent waste, including meat and dairy products. On the surface of the disposal unit, we typically see a 2- to 4-inch layer of actively feeding larvae in several stages of growth. The moment waste is deposited into the unit, the larvae

Powerful Enzymes

secrete powerful digestive enzymes into the waste long before it begins to rot and smell. Since thermophilic and anaerobic bacteria play no part in this process, these tiny creatures are able to conserve and recycle most of the nutrients and energy within the waste. The following pictures illustrate just how fast BSF larvae eat and digest food waste.

Rapid Bioconversion

Picture 1



before waste was deposited

Picture 2



5.9 kgs of waste deposited

Rapid Bioconversion

Picture 3



1.5 hours later

Picture 4



3 hours later

Rapid Bioconversion

Picture 5



4 hours later

Picture 6



7 hours later

Rapid Bioconversion

Picture 7



8.5 hours later

Picture 8



22 hours later

Rapid Bioconversion

Picture 9



24 hours later

Nothing faster, nothing more efficient!!

Nothing More Efficient

Think well what Hong Kong has here: a ubiquitous, indigenous, voracious grub with a robust digestive system, situated in an ideal tropical setting, possessing everything that it needs in terms of temperature, moisture and nutrients - a grub that thrives extremely well in the protected environment of bioconversion units whose numbers know no limit.

An Ideal Pupation Site

Upon reaching maturity, BSF larvae change color from beige to black, their mouth parts transform into a digger, they empty their guts of waste, and they set out in search of an ideal pupation site. BSF larvae will crawl over 100 meters in search of an ideal pupation site. An ideal pupation site consists of a dark, dry area providing refuge or cover for the

Exiting the Disposal Unit

mature pre-pupal larvae. BSF larvae are negatively phototactic (afraid of light), and therefore most of their migratory activity takes place at night. Their migration initially appears to be a random search for a way out of the waste. If a ramp of an upward inclination lies at the edge of the waste, they will make every effort to negotiate this ramp. If this ramp has an angle less than 40 degrees, the larvae will

Totally Self-Harvesting

have no problem exiting the unit. Such a steep angle makes it difficult for the larvae to carry along any adhering residue. At the summit of the ramp, an exit hole is provided, and this hole discharges into a collection bucket. BSF larvae are totally self-harvesting. They abandon the waste only when they have reached their final mature pre-pupal stage, and they crawl out of the waste and into a bucket.

MDPE

without any mechanical or human intervention. ESR has begun the manufacture of soldier fly bioconversion units in medium density polyethylene by means of the roto-molding process. These units resemble garbage bins, but these bins (US patent 6,780,637) are somewhat special in that they possess evacuation ramps that permit the larvae to self-harvest into a bucket.

Self-Harvesting

Ramps begin at the bottom of the unit and spiral up to the top. The next slides show the path that the larvae take in exiting the unit:

Interior Top View

The Larvae Climb Both Ramps

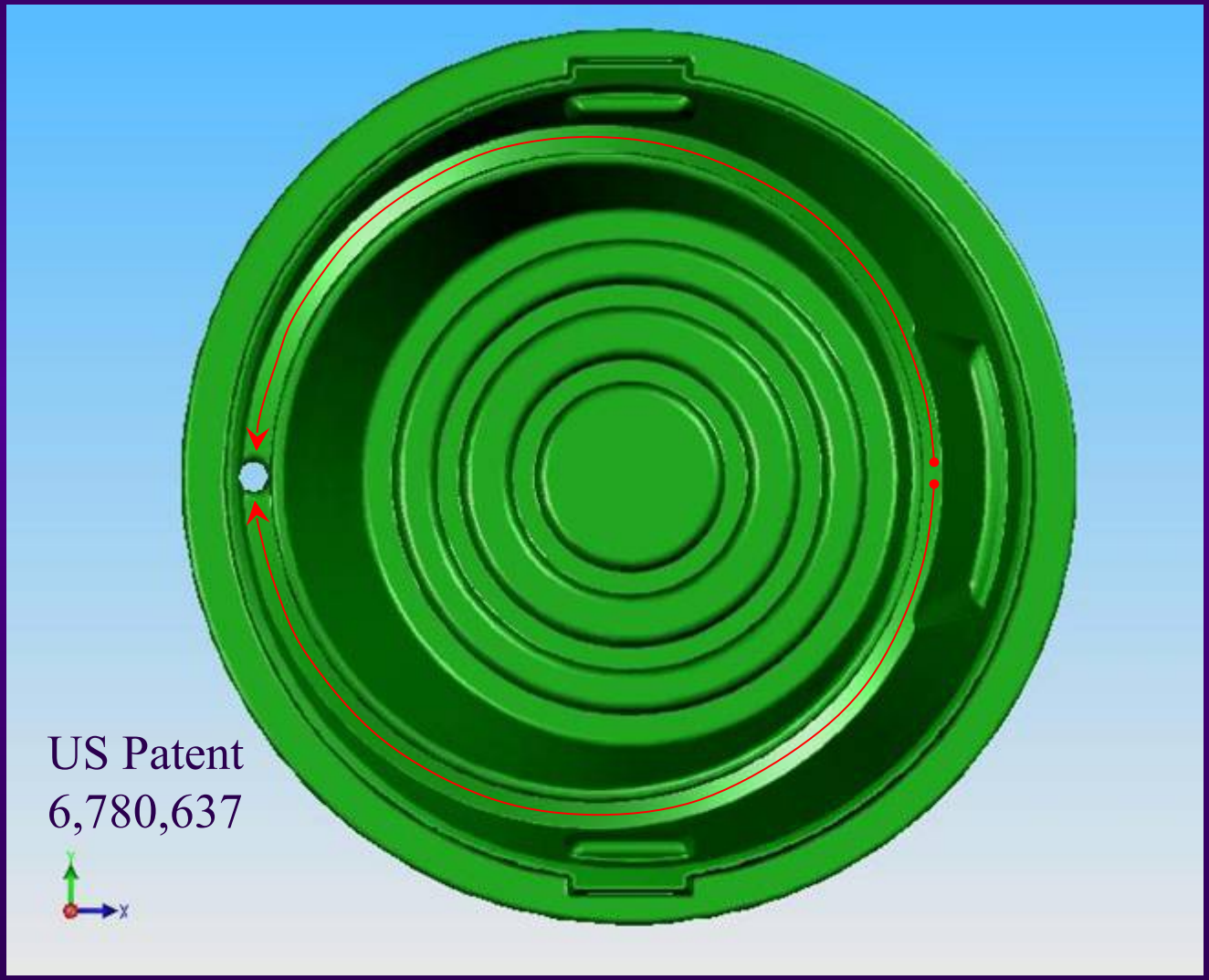

Side View

And Fall into a Bucket



Small Spiral Ramps

The spiral ramps need not be wider than about 25 mm. Consequently they occupy little space and incur little loss in the residue holding capacity of the unit. The ramps are created by means of a fold in the wall of the container. In this way, there is no underside of the ramp within the container where migrating larvae might uselessly congregate.

Right & Left Ramps

The round shape of the unit greatly assists the mature larvae in exiting the unit. As they randomly orient toward the periphery of the waste, they encounter the rounded wall of the container, at which they may turn either right or left. If they turn right, they eventually come to the base of the right ramp, and if they turn left, they eventually come to the base of the left ramp.

High Crawl-off Efficiency

Since the total distance that the larvae must travel in exiting a unit is very small, the efficiency of larval crawl-off is fully optimized. The next slide shows larvae that have self-harvested into plastic containers.

Self-Harvested Larvae





Storage of Larvae

Live soldier fly larvae are easily stored for several months in mulch or sawdust (preferably < 18 C):





Base for 2-foot Unit

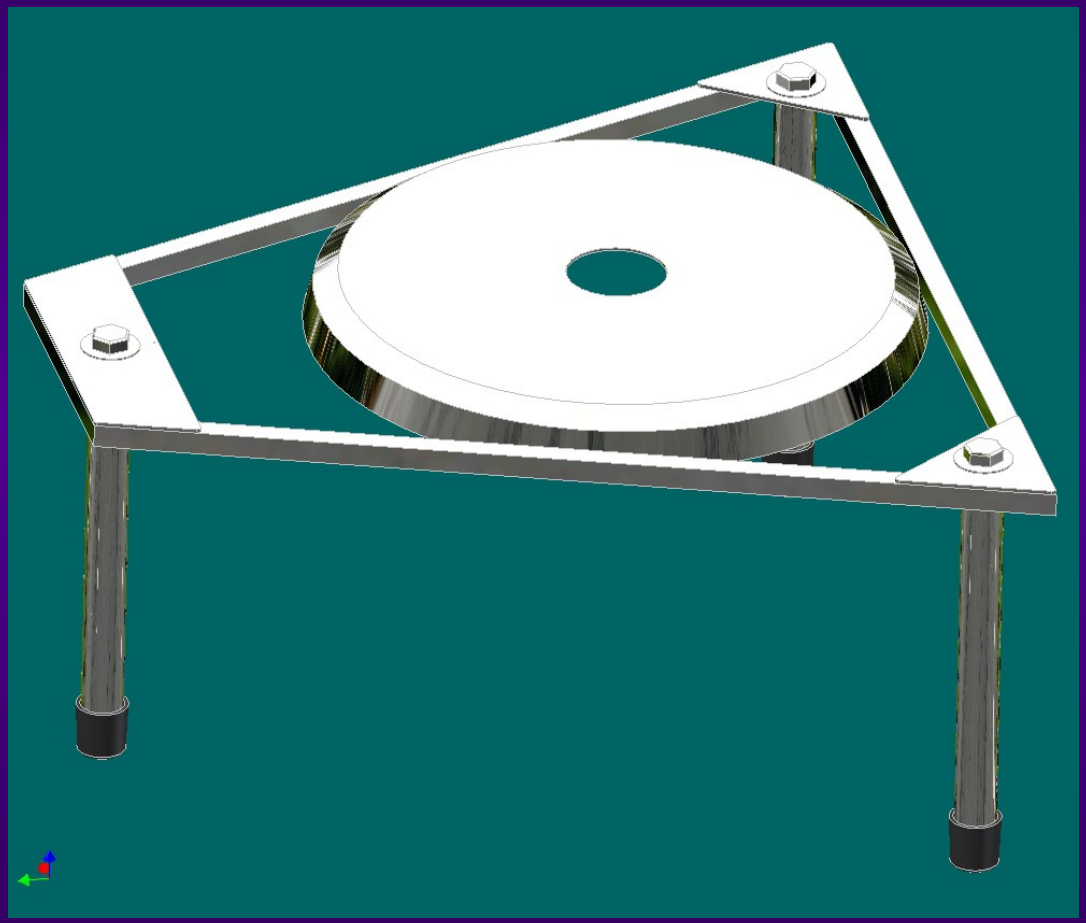

Cover of 2-Foot Unit with Egg-laying Strips

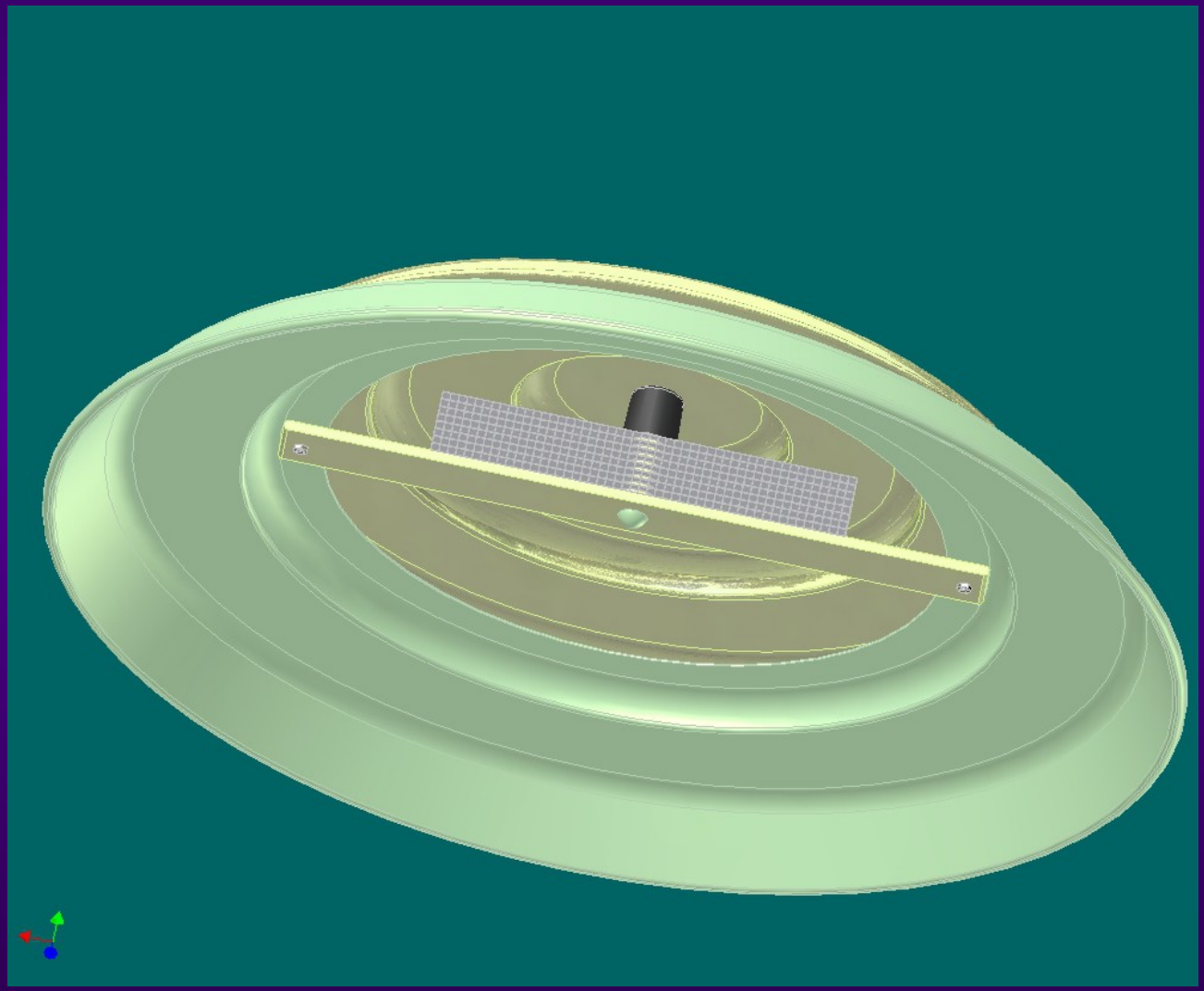

Newly Hatched Larvae

A single soldier fly egg weighs approximately 0.028 mgs, and a newly hatched larva weighs the same and is visible as a tiny speck of flour. The females prefer to lay eggs, not in the unit, but outside the unit at the point where odors exit the unit. The odors exiting the unit serve as a guide to the newly hatched larvae, helping them find their way into the unit. I have often observed them

Newly Hatched Larvae

crawling several inches, at times over obstacles several inches in height, in a straight line to that point where odors were exiting the unit. They then fall into the unit in search of the source that gave rise to these odors. The mobility of newly hatched larvae and their sense of direction are quite fascinating.

Liquids Collection Jar with Filter

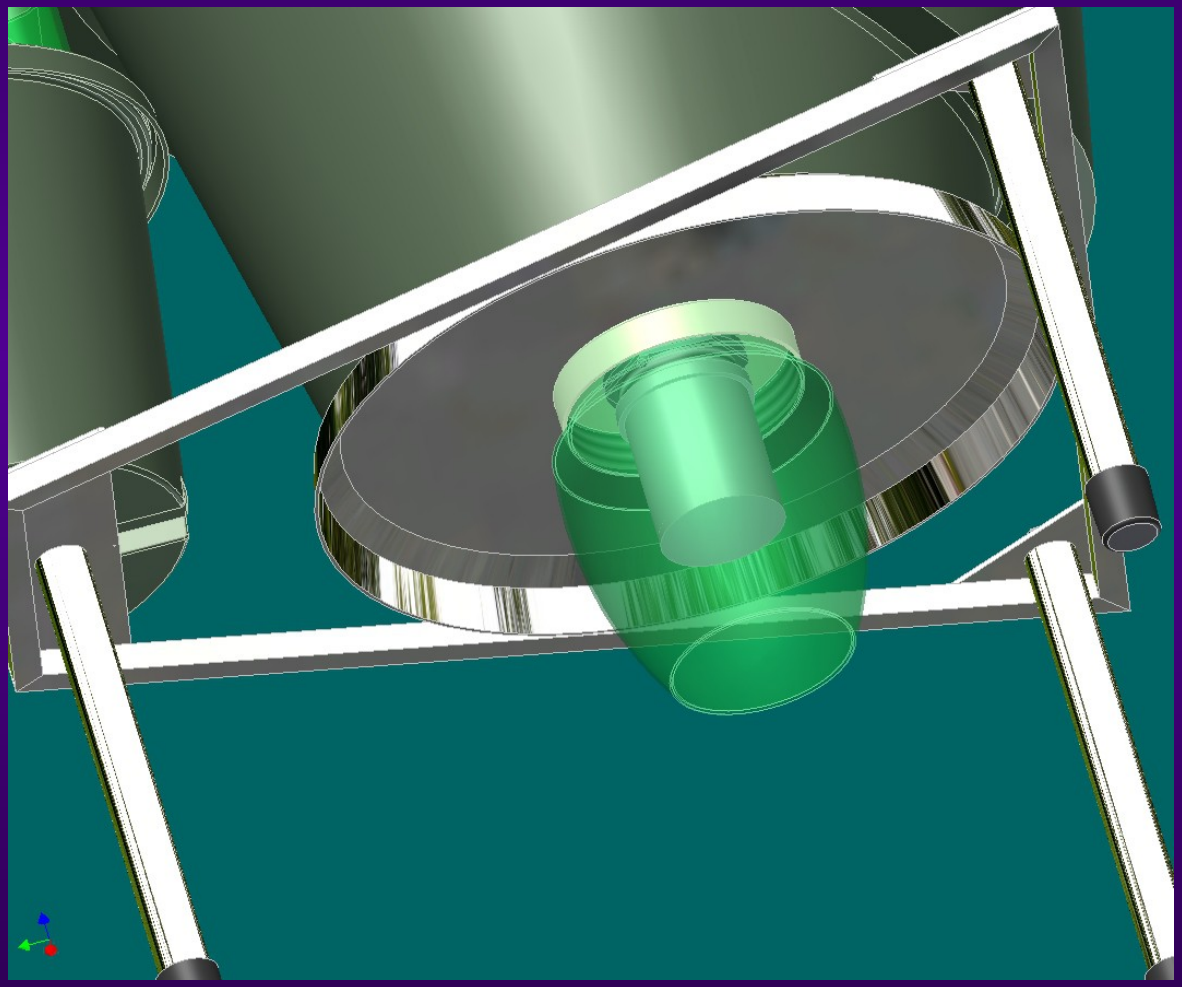

2-Foot Unit with Collection Bucket



Capacity

This 2-foot unit can handle over a metric ton of food waste per year or about 2.75 kg/day. This unit serving a family of four people would have to be emptied once every 3 or 4 years. With this process, the costly transport and land-filling of food waste is completely eliminated.

2-Foot Unit



Sawdust and Maturation

No adult emergence will take place for at least 15 days after the larvae crawl into the collection bucket. Dry sawdust is placed at the bottom of the collection bucket to dry the larvae and induce them to stop their migration effort.

4-Foot Unit

To handle large quantities of waste, ESR has designed a nominal 4-foot unit. This unit can receive 5.5 metric tons of food waste per year, or 15 kg of food waste per day. Any number of these units can be operated on a site, even on multiple levels. The input of food waste can be done by hand, or it can be pumped.

2-Foot inside of a 4-Foot



4-Foot on its Base



Analysis of Dried Soldier Fly Prepupae

42.1% crude protein

34.8% ether extract (lipids)

7.0% crude fiber

7.9% moisture

1.4% nitrogen free extract (NFE)

14.6% ash

5.0% calcium

1.5% phosphorus

Source: Newton, Booram, Barker & Hale, 1977

Menhaden Fish Meal

About half of BSF fresh weight translates into a dry meal that has roughly the same value as Menhaden fish meal valued at about $1,200 US dollars per ton.

An Incredible Eating Machine



BSF and Worms

BSF larvae capture nutrients long before bacteria have had a chance to degrade them, and the non-putrescent BSF residue constitutes an ideal substrate for red worms. Recent studies in Asia indicate that BSF residue allows red worms to grow three to five times faster than when fed fresh putrescent waste. Not only do the proteins and fats made available in the larvae and red worms rival in quality those of the

BSF and Worms

finest fish meal, but they also represent the most efficient extraction and conservation of nutrients and energy to be found anywhere within the natural world. By allowing BSF larvae and red worms to extract proteins and fats from our waste, we do not have to turn to our oceans and farmlands to obtain these nutrients. When we consider the enormous energy expended in fishing and agriculture, the

BSF and Worms

utilization of these lower life forms becomes an irresistible option to anyone seriously concerned about reducing carbon emissions. But the story does not end here….

Worm Castings = the Finest Fertilizer

When red worm castings are made available to a plant as fertilizer, the plant will require far less nitrogen derived from fossil fuels and far less phosphorous extracted from phosphorous-bearing rocks (an energy intensive process). Most nitrogen fertilizers are derived from natural gas, and world reserves of phosphorous are rapidly dwindling and increasingly contaminated with pollutants.



True Sustainability

We talk a lot about sustainability, but we will never relate to nature in a sustainable manner until we give back to nature in a closed loop all of the nutrients that she needs to sustain us. Capturing all of the nutrients in our waste and making these nutrients available to the life processes that support us is surely our first and most important obligation as citizens of plant Earth.